PART NUMBER	TANK COLOR
32781	BLACK
32783	DARK GREEN

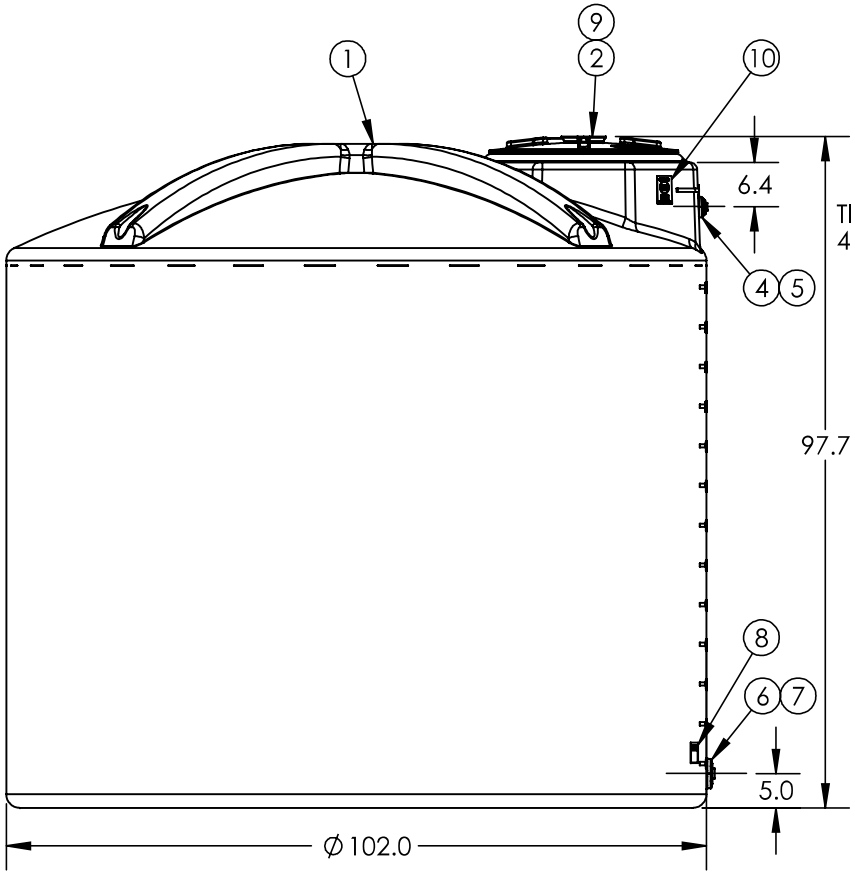

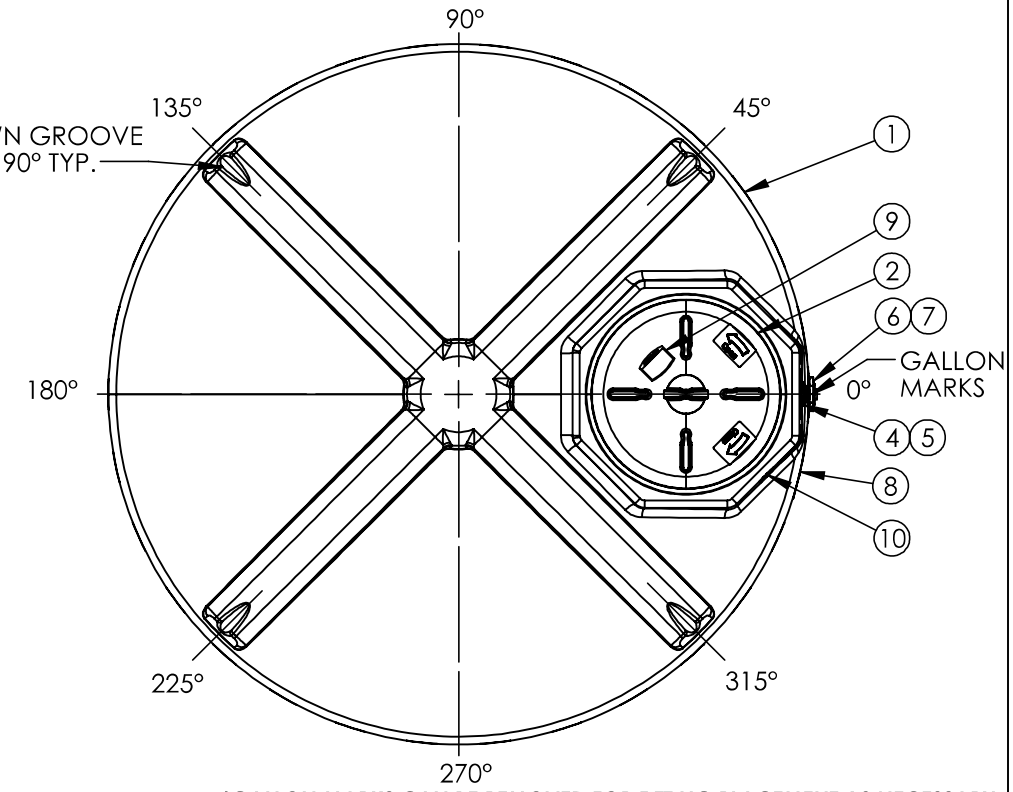

***GALLON MARKS CAN BE REMOVED FOR FITTING PLACEMENT AS NECESSARY.**

ITEM NO.		PART NUMBER	DESCRIPTION
10	1	99700231	DECAL NSF MARK - WATER TKS
9	1	61848	DECAL AG WARNING - LARGE
8	1	61847	DECAL AG WARNING - SMALL
7	1	60021	2" NPT PLUG
6	1	63683	FTG 2IN HD BH PP/EPDM
5	1	64149	1-1/2" NPT PLUG
4	1	63931	FTG PP 1-1/2IN ECO-BH EPDM TXT
3	8	60081	SCREW #9 X 1" SS 5"-22" LID
2	1	64443	MANWAY 26IN W/VENT R
1	1	30401-ME	3000V X 102 RP ME

***ALL EXTERNAL PIPING MUST BE INDEPENDENTLY SUPPORTED.**
***ONLY BASE FITTINGS TO BE LEFT INSTALLED AT TIME OF SHIPMENT PER SII PROCEDURE.**
ALL DIMENSIONS ARE IN INCHES, NOMINAL, & SUBJECT TO CHANGE WITHOUT NOTICE.
ALL DIMENSIONS ON ROTATIONAL MOLDED PARTS ARE SUBJECT TO A ± 3% TOLERANCE.

DO NOT SCALE | DRAWN BY: SB

STATUS: **Released**

© SNYDER INDUSTRIES, LLC, 2020

ALL DIMENSIONS, DESIGNS, AND INFORMATION ON THIS PRINT MUST BE CONSIDERED PROPRIETARY TO SNYDER INDUSTRIES, LLC, AND MAY NOT BE USED, COPIED, OR DISTRIBUTED WITHOUT WRITTEN PERMISSION OF AN OFFICER (OR HIS AGENT) OF THE FIRM.

SII SNYDER INDUSTRIES
(402) 467-5221
www.snydernet.com

TITLE: **3000 X 102 V WATER RS WF**

REVISION: **A**

SHEET: 1 OF 1

PART NO.: **SEE CHART**

ENG. ID.: **A017916**