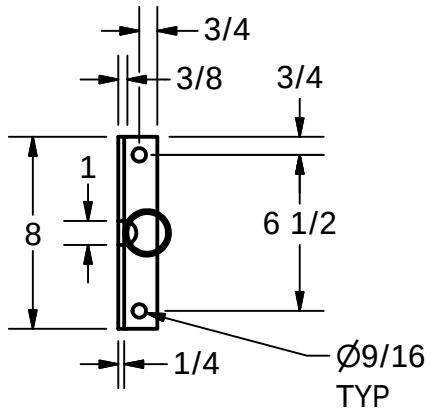

SECTION A-A
SCALE 1/8

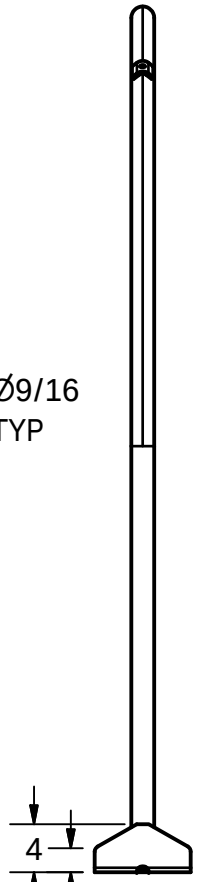

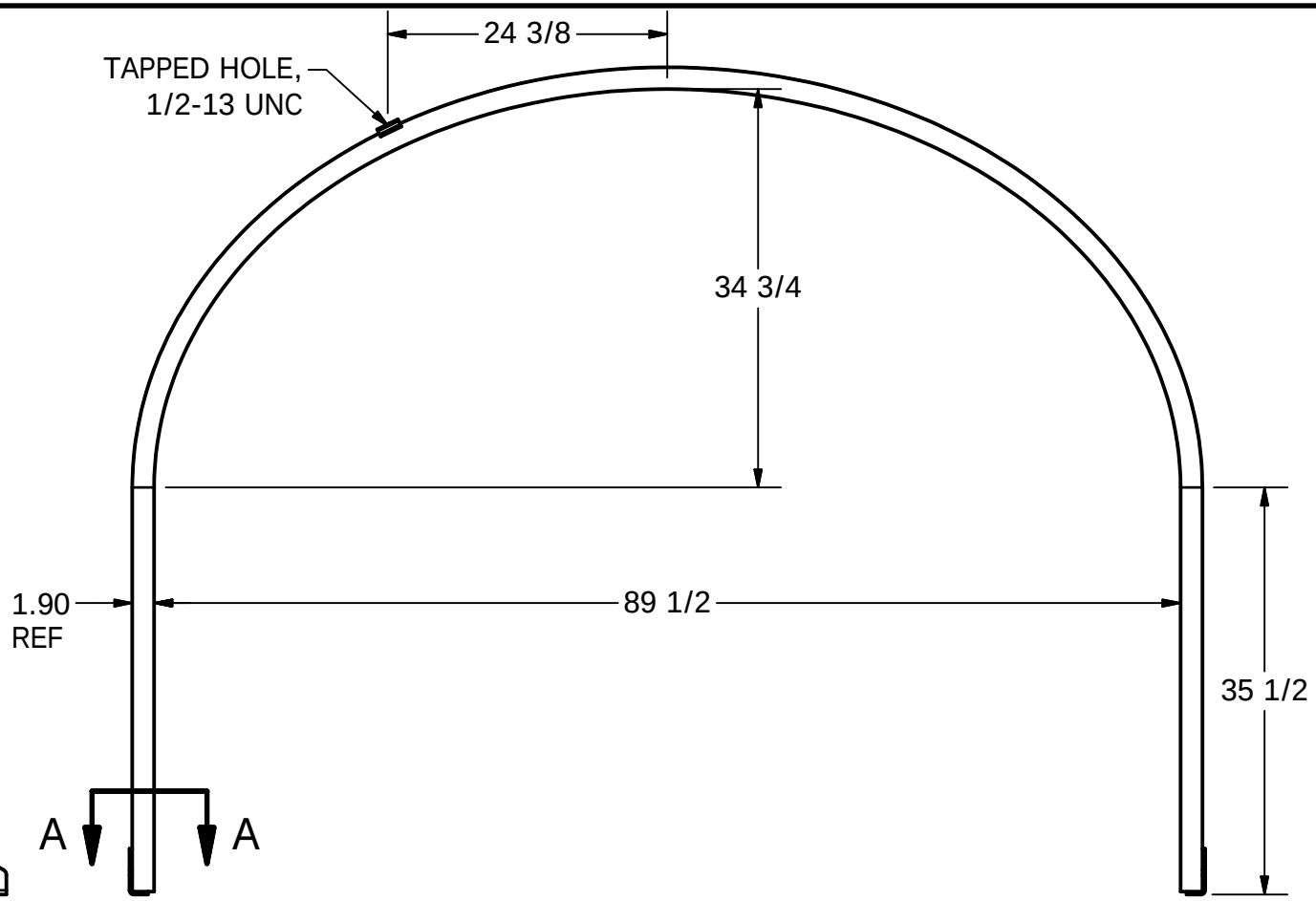

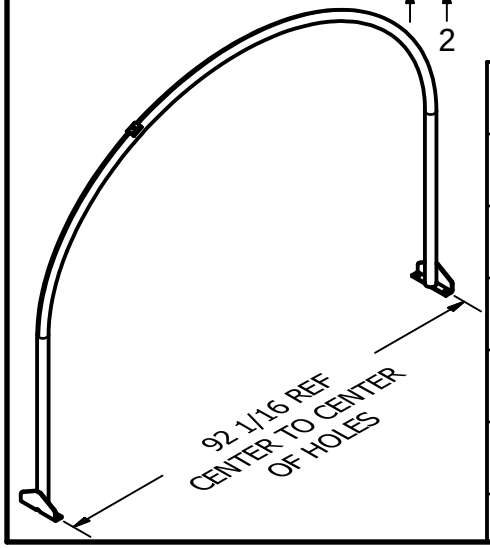

DRAWN Jerry Paulson	3/5/2010	NORWESCO, INC., ST. BONIFACIUS, MN
CHECKED		TITLE
QA		BAND, 4010/4035 ELLIPTICAL TANK
MFG		
APPROVED		
		A — DWG NO 62832 — REV
		SCALE: 1/16 — SHEET 1 OF 1