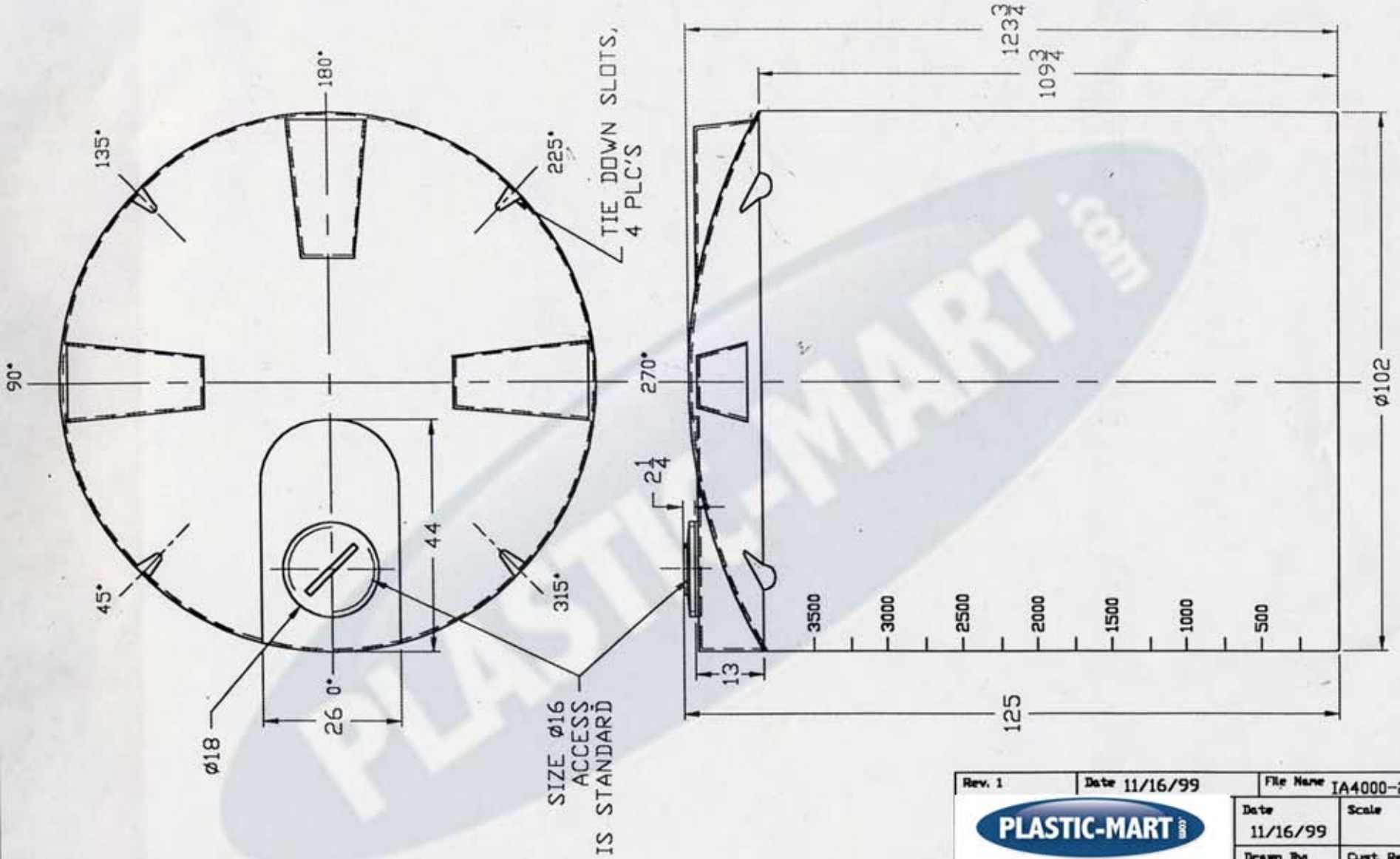

Rev. 1	Date 11/16/99	File Name IA4000-2	
PLASTIC-MART 866-310-2556		Date 11/16/99	Scale
		Drawn By IIA	Cust. Rep.
TITLE 4000 GAL. VERT. STORAGE TANK			
Part # TC4001IA/IC		Dwg. # C-4000-25	

THIS DRAWING & DESIGN IS THE PROPERTY OF CHEM-TAINER INDUSTRIES INC. IT MAY NOT BE USED FOR ANY PURPOSE OTHER THAN BY THE OWNER. CHEM-TAINER DOES NOT AUTHORIZE THE REPRODUCTION OR CONVEYANCE OF ANY INFORMATION CONTAINED HEREIN.

ALL DIMENSIONS SHOWN ARE OUTSIDE PART DIMENSIONS IN INCHES, AND VARY BY THE STANDARD ROTATIONAL MOLDING TOLERANCE OF ±2%.