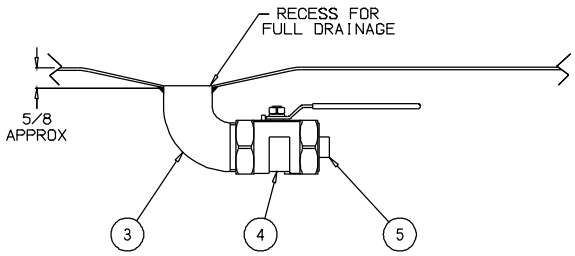

VALVE ASSEMBLY DETAIL
SCALE: NONE

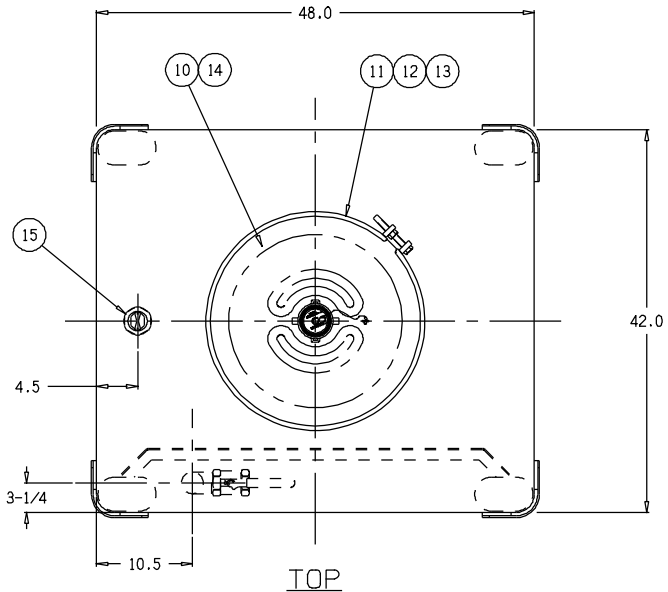

TOP

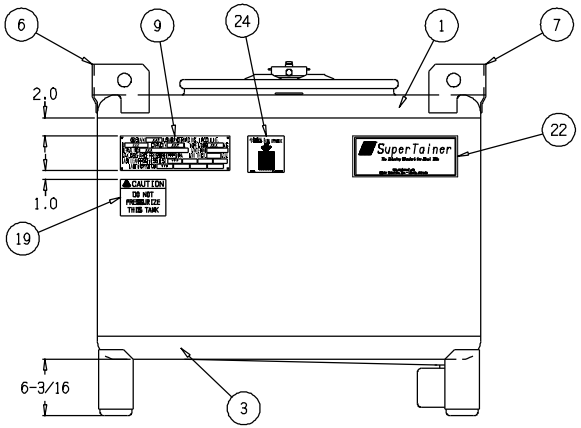

LEFT SIDE

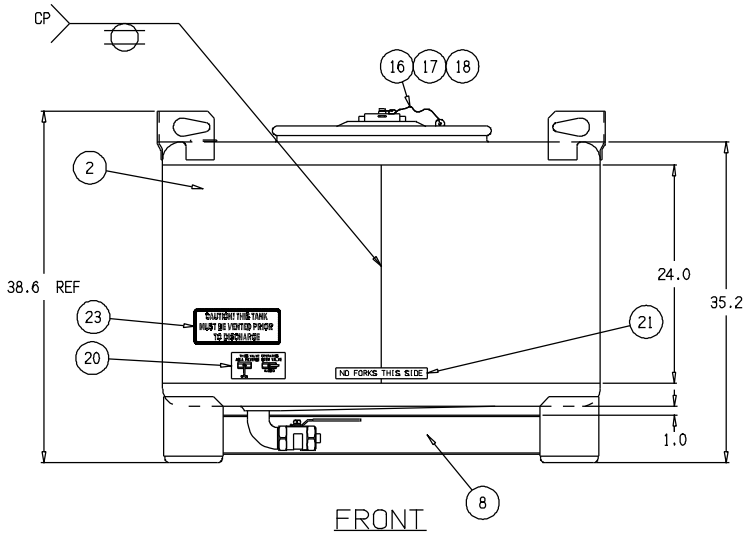

FRONT

REVISION

NO.	DATE	DESCRIPTION	BY	APPD.
a	05/26/2010	FITTING DIMENSION LOCATION CHANGED FROM 6" TO 4-1/2"	JCB	LT
b	06/30/2010	ADDED CAUTION DECAL PART# 99700315	JCB	LT
c	11/22/2010	ADDED IBC STACKING DECAL	JCB	

NOTES:

1. TANK IS DESIGNED AND CONSTRUCTED IN ACCORDANCE WITH U.N. SPECIFICATIONS
2. TANK IS AIR TESTED AT 3 PSI
3. ALL WELDS CLEANED OF SLAG AND SPATTER
4. TANK INTERIOR AND EXTERIOR ARE ELECTRO-CLEANED
5. DRUM LID TO BE INSTALLED BY: STRIKE RING AROUND CIRCUMFERENCE WITH A MALLET THEN TIGHTEN THE BOLT WITH A WRENCH. REPEAT UNTIL BOLT TIGHTENING RESISTANCE DOES NOT CHANGE (REF: 40 LB-FT)
6. 2IN BUNG TO BE INSTALLED 3/8 TO 1/2 ROTATION BEYOND SOLID GASKET CONTACT (REF: 30 LB-FT)

NO.	QTY.	PART NUMBER	DESCRIPTION
24	1	99700356	IBC STACKING DECAL - 1985KG [250 SUPERTAINER]
23	1	99700315	DECAL CAUTION VENT PRIOR TO DISCHARGE
22	1	99700260	DECAL SUPERTAINER
21	1	99700247	DECAL NO FORKS THIS SIDE
20	1	99700248	DECAL REVERSE STEM VALVE OPEN/CLOSE
19	1	99700258	DECAL DO NOT PRESSURIZE
18	1	33900433	FERRULE 1/8IN ALUM DUPLEX
17	1	33900431	WIRE LINE 1/16 X 12LG W/ 1/8 VINYL
16	1	35900882	FUSIBLE VENT 3IN POLY TEF-GSKT 316SS
15	1	35901511	PLUG 2IN HEX HEAD WH EPDM GASKET 304SS
14	1	33100387	GASKET 22-5/16 DIA MULTIPURPOSE EPDM
13	1	35100330	NUT HEX 5/8-11 ZINC PLTD CS
12	1	35000183	BOLT HEX 5/8-11 X 5 FULL THRD ZINC PLTD
11	1	35900679	BOLTED CLAMP RING 22-5/16 ZINC-PLTD CS
10	1	35901281	LID 22-5/16 DOT 3IN TOE NIPPLE 304SS
9	1	36500069	PLATE UN SUPERTAINER 304SS DWG#B4462
8	1	35901173	VALVE GUARD 4-1/4 X 43-1/2 X 10GA 304SS
7	2	35901455	LIFTING LUG L 304SS
6	2	35901454	LIFTING LUG R 304SS
5	1	34200833	PLUG PVC 2IN NPT SQ HD
4	1	35400242	VALVE 2IN REV-STEM BV LOCK-HNDL 316SS SII
3	1	35902034	ASM BTM 42 X 48 X 10GA W/LEGS & SWEEP EL 304SS
2	2	33800338	SHELL 24 X 42 X 48WS X 10GA W/PVC 304SS
1	1	35902036	ASM TOP 42 X 48 X 10GA W/2IN WP 304SS

BILL OF MATERIALS

SNYDER INDUSTRIES, INC.
LINCOLN, NE 68504 PHONE:(402) 467-5221 FAX:(402) 467-3247

CUSTOMER: SII STANDARD
JOB: 6984000B51318

SCALE: 1:10	APPROVED BY:	DRAWN BY: JCB	
DATE: 12/30/2009		CHECKED BY: LT	
DESCRIPTION: 250 GAL 42 X 48 SUPERTAINER SS		DRAWING NUMBER: 23475c	

© SNYDER INDUSTRIES, INC., 2010

ALL DIMENSIONS, DESIGNS, AND INFORMATION ON THIS PRINT MUST BE CONSIDERED PROPRIETARY TO SNYDER INDUSTRIES, INC. AND MAY NOT BE USED, COPIED, OR DISTRIBUTED WITHOUT WRITTEN PERMISSION OF AN OFFICER (OR HIS AGENT) OF THE FIRM.