Company name:
Created by:
Phone:

Date: 30/09/2024

99503875 CMBE TWIN 10-54 I-U-C-B-D-H 60 Hz

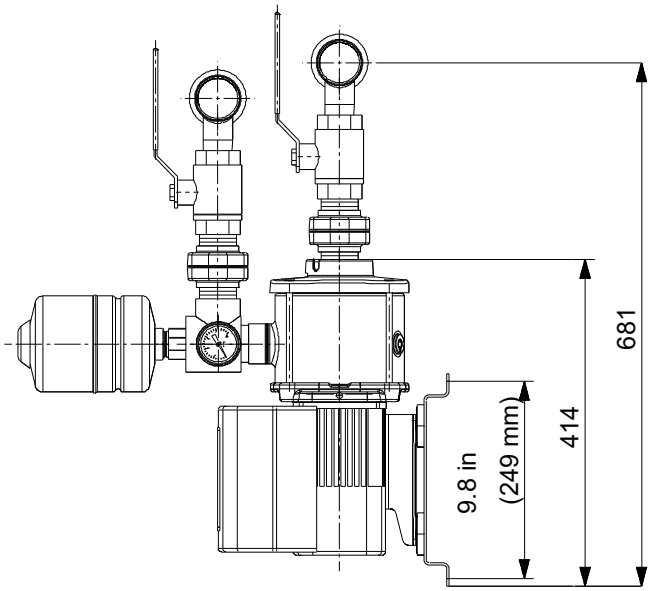

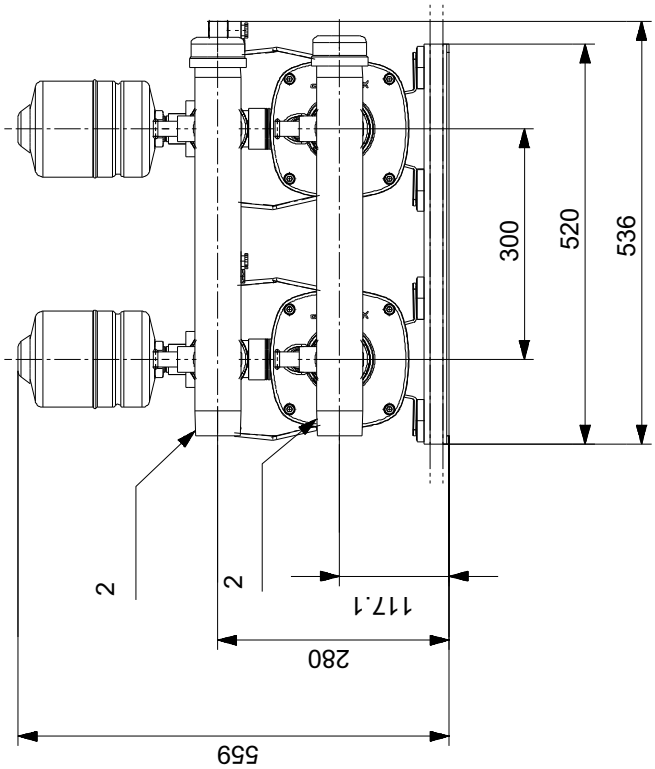

Note! All units are in [mm] unless others are stated.
Disclaimer: This simplified dimensional drawing does not show all details.