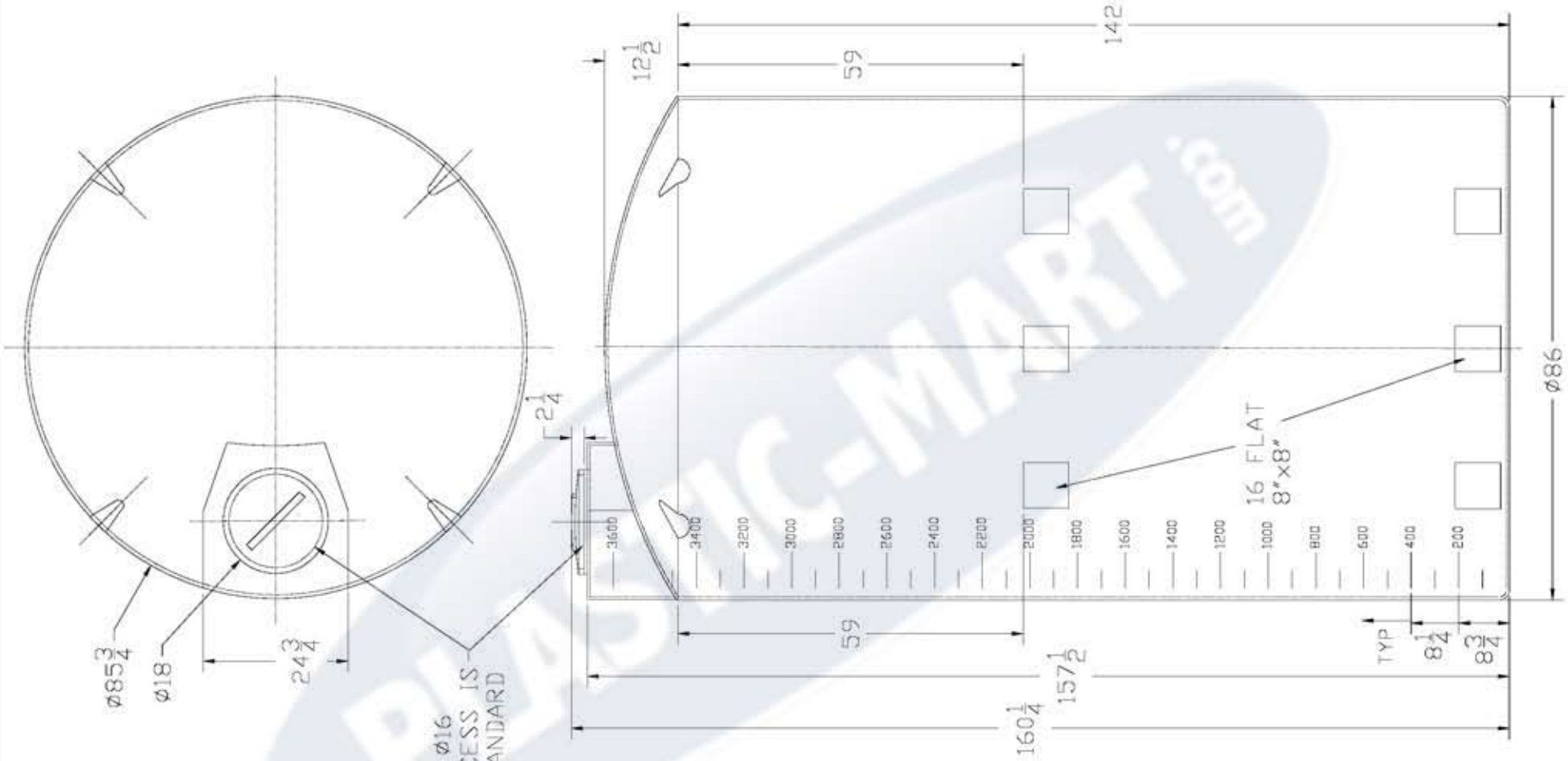

PLASTIC-MART.com

PLASTIC-MART.com 866-310-2556		File Name	IA3600-1
		Date 11/15/99	Mold Location TN
		Drawn By IIA	Cust. Rep.
TITLE 3600 GAL. VERTICAL BULK STORAGE TANK			
Part # TC3600IA/IC		Dwg # C-3600-1A	

THIS DRAWING & DESIGN IS
THE PROPERTY OF CHEM-TAINER INDUSTRIES INC.
IT MAY NOT BE USED FOR ANY PURPOSE
OTHER THAN BY THE OWNER. CHEM-TAINER DOES NOT
AUTHORIZE THE REPRODUCTION OR CONVEYANCE
OF ANY INFORMATION CONTAINED HEREIN.

ALL DIMENSIONS SHOWN ARE OUTSIDE PART DIMENSIONS IN INCHES,
AND VARY BY THE STANDARD ROTATIONAL MOLDING TOLERANCE OF ±2%.