REVISIONS				
ZONE	REV	DESCRIPTION	DATE	APPROVED

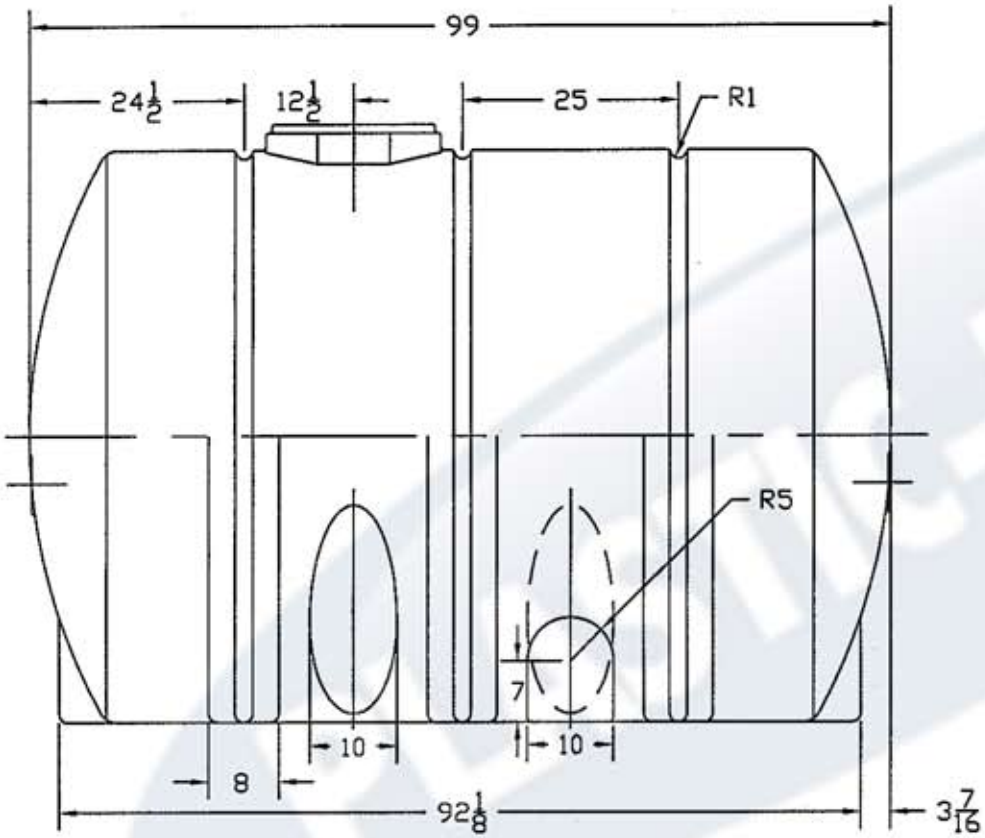

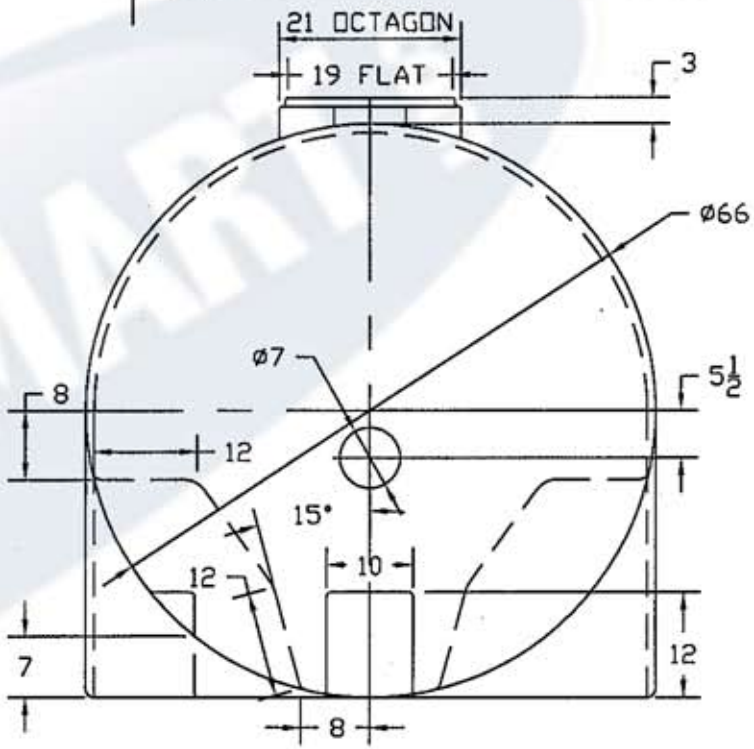

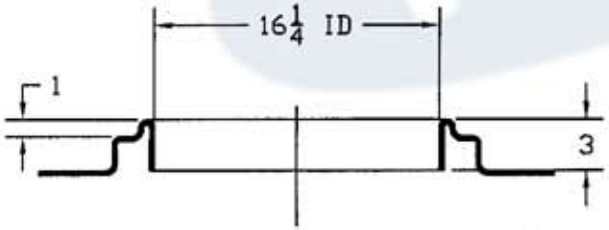

FILLWELL DETAIL - 1/8/ SCALE

PLASTIC-MART 866-310-2556

1325 GALLON HORIZONTAL LEG TANK

JTP 04AUG03	SIZE B	FSCM NO.	DWG NO.	REV
	SCALE 1/16		SHEET	